SAMWON TECH

IP65

Temperature & Humidity Programmable controller

# TEMI2000 SERIES

Dual/Single loops Programmable controller

# TEMP2000 SERIES


- SD Memory Card
- Digital Recorder Function
- High Resolution Screen
- Heating · Cooling Control Support
- Separated Type Hardware
- Customized UI

http://www.samwontech.com

Being the leader of controller market in the 21th century with the best technology

# What's **Unique** in TEMI/TEMP 2000 series

## **Digital Recorder** Function


### SD Card adapter

All data in internal memory including trend data and setup parameter value can be forwarded and saved in SD card. Each saved data as a file offers easy way to manage operation record and system parameters

### Real-Time Monitoring

Monitors PV, SP and MV for each channel.
Displays as trend graph in real time.
Records data to built-in internal memory

### Displays data by trend graph

Saved trend data in internal memory as file unit can be opened and displayed as trend graph

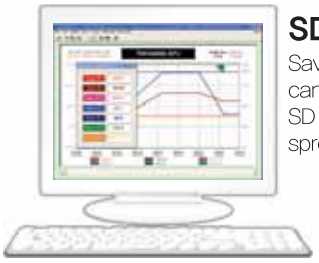

### SD Viewer

Saved monitoring trend data in SD card can be opened and displayed with free SD viewer software and converted to spread sheet of MS Excel file

### Easy parameter Up/Down load

Parameter setup value can be forwarded to other same type controller easily through SD card

## **Separated** Hardware

Separated structure of the product as 2 part –Display Unit, Control Unit and I/O board– offers more various applications for system configuration

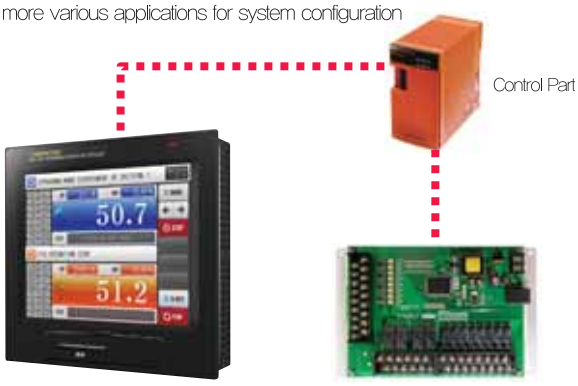


## **VESA** mount

Panel mount as well as VESA mount is useful to diversify and set more unique system installation

## Screen Customizing


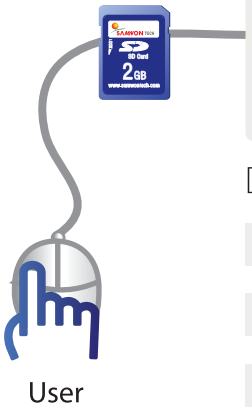


Displays customized screen by uploading user made BMP image

| | | |
|---|---|---|
| ON | Initial LOGO screen | User made and customized screen wil appear when power on the controller |
| ERR | DI ERROR screen | User can upload self–designed BMP image showing their error part and message<br>That Customized error screen appears when occurring DI error |
| ▪▪▪ | USER screen | 16 BMP images for showing product and company information made by user can be set into controller.<br>Those images will appear by rotating with no key input after passing assigned time like screen saver |

## Specialized Display and Screen configuration

**Various PV Fonts**
Offers three kinds PV fonts of HEAD / NORM / ART

**Easy Menu**
Simplified menu configuration makes setting parameters easy no matter how many parameters user wants

**Various LCD size**
Select 3.7", 5.7", 7.5" and 7.5"

**High Resolution Screen**
640 x 480, 256K pixels TFT–LCD shows distinguished clear screen seems real picture

**Multi–Language system**
Support KOR/ENG/JPN CHN language

**Easy Keypad**
Easy setup parameter – variable Input Keypad, Alphab/Numeric

## Heating/Cooling Program control

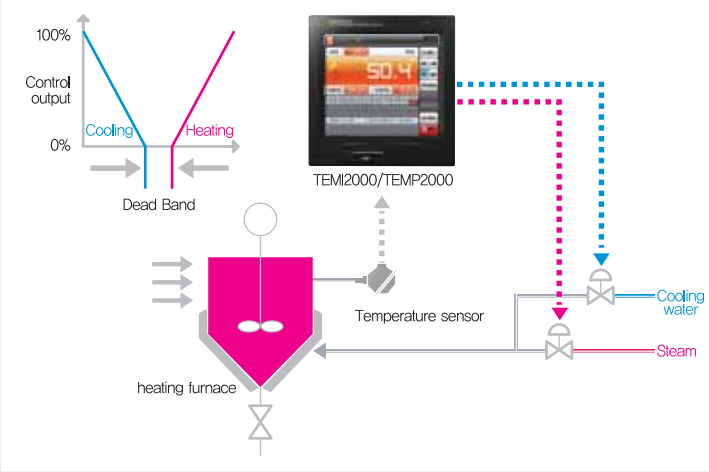


▶ Heat and Cooling Control by Equipments

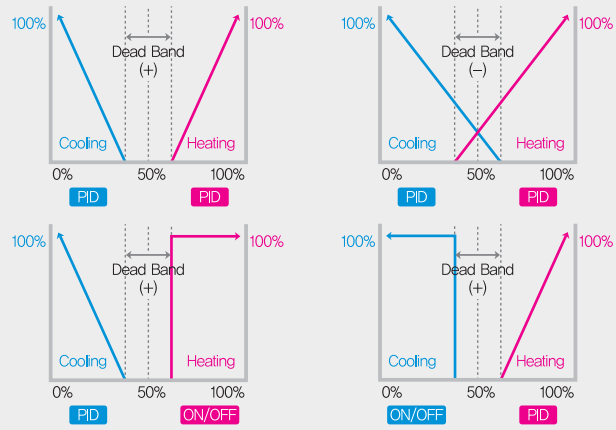

# General Outline of TEMI/TEMP 2000 series

## Features & Functions


### Touch Screen Interface
Easy access to setup and operate with Touch Screen

### Variable PID groups
Precision control with each optimized PID group for specified range

### High Accuracy
Precision control with 18bit A/D Convertor,
Temp. : ±0.1℃ + 1 digit of F.S
Humi. : ±1% + 1 digit of F.S

### Input Sensor Bias
Offset value depending on characteristics of system helps smooth PV line applying assigned offset by each flexibly predefined ranged

### Extended Pattern Time
999h. 59min. 59sec. can be programmed in every single segment

### Infinity Program Operation
1200 SEGs with TEMI: 120PTNs / TEMP: 80PTNs.
Max. 999 times PTN/SEG repeat operation and link operation makes infinity program operation

## System Applications

### Temperature & Humidity Programmable Controller TEMI2000 series

#### Specialized controller
As a specialized controller for temperature humidity test chamebr, synchronized control system with all sensor combination PT-PT, PT-DCV, DCV-DCV and DCV-PT

#### Optimizing PID group
Precision control by 6 group of temp/humi and 3 group of temperature only

#### Humidity Display Mode
Selectable relative humidity display mode between Auto/Manual when setting "0" to Humidity SP

#### Specialized Humidity Control
Flexible Humidity control mode on extreme condition such as high and low temp./Humi.

Available various installation of Display Part on outside of system with VESA mount

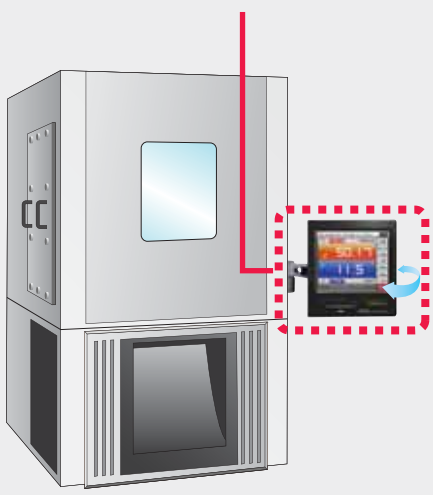

Application of panel mount on the front door to save external dimension and offer user convenient

Small 3.7" Display part of TEMI2300 is good for BENCH-TOP chamber configuration

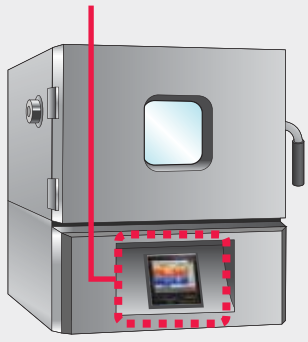


### 16 Digital Inputs
16 digital input points with max 12V contact can be allocated to assigned action of RUN/STOP/HOLD/STEP and DI ERROR input

### 32 Digital Outputs
32 digital outputs (STD 12 + OPT 20) points can be assigned to about 80 types of various signal like LOGICAL, DI, MANUAL USER, IS, TS, ALM, RUN and so on

### Digital Recorder Function
Real-time monitoring displays as trend graph and easy data acquisitions of PV, SP and MV
No additional Recorder required

### SD memory card
Easy data management with Viewer software, parameter setting value and customized image Up/Down load with SD card

### Free PC Software
Free PC multi-monitoring software for Communication and SD Viewer for data management of SD data

### Powerful Communication
Flexible communication interface between RS485 / RS232C by socket-pinhead directly and 115,200 bps communication speed
ETHERNET support


## Single / Dual Programmable Controller TEMP2000 series

### Double Password
Preventing from unauthorized access for system and program, and classifying authorization degree of end-user

### User TAG
Naming each zone with 6 digits character with TAG feature in order to classify and display

### Asynchronous/Synchronous Mode
Two independent loop controls that can be performed with different programs, and also be done simultaneously in one program

### Displays START/END Time
Displays operating time as well as START and Estimated Operation End time for End-User convenient

### Sync Communication
Available for communicating with upper system like PC, PLC simultaneously, while activating Sync-communication with lower system by synchronizing slave controllers with SP of TEMP2000

### Various UNIT displays
Available 12 kinds of various UNIT to display
Under DCV sensor
(℃, %, ℉, blank, Pa, %RH, V, KPa, mV, mmHg, kg, f)

2 / 4 zone chamber application with TEMP2000 dual loops control.
Each zone can be controller individually by Asynchronous/Synchronous Mode

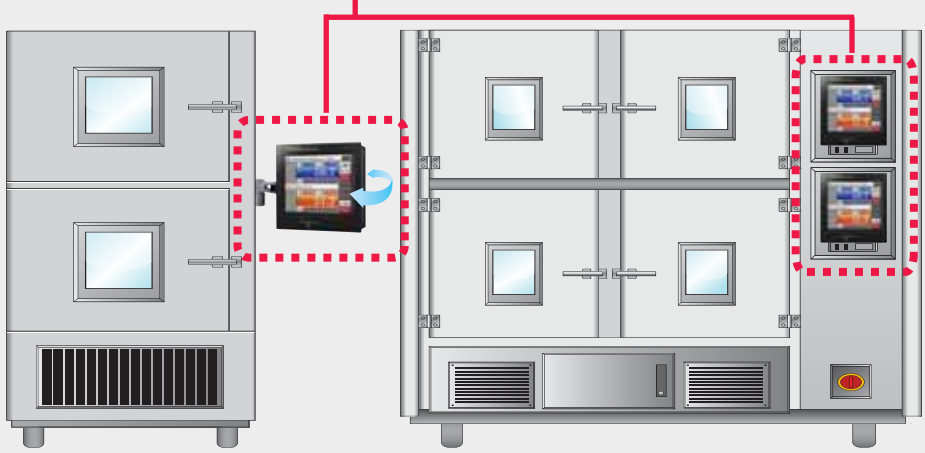

1 zone control and additional 1 zone monitoring without recorder

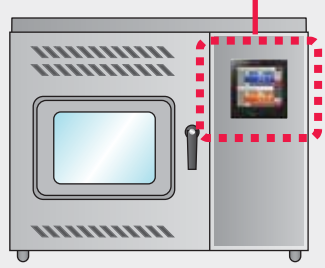

# Temperature & Humidity
## Programmable controller **TEMI2000** series

## General **Specifications**

| Group | Item | TEMI2300 | TEMI2500 | TEMI2700 |
|---|---|---|---|---|
| Display | Type | 3.7" TFT-LCD | 5.7" TFT-LCD | 7.5" TFT-LCD |
| | Screen Resolution | 640(W) x 480(H) | | |
| | Language | KOR / ENG / JPN, KOR / ENG / CHN, KOR/ ENG / RUS | | |
| | Font | 3 kinds of PV font(HEAD/NORM/ART) | | |
| | Logo Screen | Available to customize initial Logo screen by user | | |
| | User Screen | 16 customized user interface for screen saver | | |
| | Mount Method | Panel mount, VESA mount(MIS-D 75) | | |
| Analog Input | Number of point | 2 Points(Temperature : 1point, Humidity : 1point) | | |
| | Type | Temperature | PT1 100Ω | -90.00 ~ 200.00℃ |
| | | | PT2 100Ω | -100.0 ~ 300.0℃ |
| | | | DC Voltage | -1.000 ~ 2.000V |
| | | Humidity | PT 100Ω | -10.0 ~ 110.0℃ |
| | | | DC Voltage | 1.000 ~ 5.000V |
| | Sampling Time | 250ms | | |
| | Accuracy | Temperature | ±0.1% + 1digit of Full Scale | |
| | | Humidity | ±1% + 1digit of Full Scale | |
| | Bias | Each 4 points Piece Bias for temperature and humidity | | |
| Analog Output | Type | Voltage(SSR) 2 points | ON : 24V DC(Pulse width: min. 5ms) | |
| | | Current(SCR) 2 points | 4~20mA DC(Load resister :Max. 600Ω) | |
| | Object | Control output | MV(0 ~ 100%) of temperature and humidity) | |
| | | Retransmission output | Selectable among PV, SP, MV of temperature and humidity | |
| Digital Input | Contact type | 16 points base (Relay contact capacity : max. 12V DC, 10mA), Select A or B point contact | | |
| | Functions | RUN/STOP/HOLD/STEP, Selectable RUN patterns,<br>Set DI Detect Delay time, Select DI error monitor(text or picture) | | |
| Digital Output | Number of point | 12 points base(Additional 20 points by option) | | |
| | Contact type | 4 points base C-contact Relay | Normal Open (Max. 30VDC/1A, 250VDC/1A) | |
| | | | Normal Close (Max. 30VDC/1A, 250VDC/1A) | |
| | | 8 points base A-contact Relay | Normal Open (Max. 30VDC/1A, 250VDC/1A) | |
| | | Additional 20 points A-contact Relay(Option) | | |
| | Signal type | Inner Signal(10points) ON/OFF Signal(TEMP 10points, HUMI 5points) Logical Signal(3points) Error Signal(1point) User Signal(1points) | | |
| | | Time Signal(4points) Fix · Programmable END Signal(2points) DI Signal(16points) Sensor open Signal(2points) REF Signal(2points) | | |
| | | Alarm Signal(8points) UP · SOAK · DOWN Signal(6points) manual Signal(12points) Fix Timer Signal(2points) | | |
| | | RUN Signal(2points) WAIT Signal(2points) Drain Signal(1points) | | |
| Program | Number of program | 120 Patterns / 1200 Segments | | |
| | Segment Time | Max. 999hours 59minutes 59seconds in one segment | | |
| | Auxiliary functions | UP/DOWN Slope rate, WAIT, Operating Start Code, Pattern Name, Power Stop mode, PTEnd mode | | |
| | | Pattern / Segment repeat operation | | |
| PID Control | PID groups | 9 PID groups(6 PID groups for temperature · humidity, 3 PID groups for temperature only) | | |
| | PID type | Zone PID | | |
| | Auxiliary functions | Changeable Tuning point, PID tuning Gain, Selectable humidity control code | | |
| Data Back-Up | Object | SD card, MMC card(FAT32) | | |
| | Logging function | Back-up and restore data of Program Pattern / Parameter Settings, and SP / PV / MV value , Ethernet support | | |
| Communication | Interface | Flexible to change between RS485 / RS232C by DIP switch, Max. 31 nodes, Max 115,200 bps | | |
| | Protocol | PCLink, PC Link(Checksum), MODBUS RTU, MODBUS ASCII | | |
| Power Supply | Power | 24VDC 22VA Max. | | |
| | Lithium battery | For setup data retention(CR2032) | | |

## Model **Code**

| T | E | M | I | 2 | (1) | 0 | 0 | - | (2) | (3) | / | (4) | / | (5) |
|---|---|---|---|---|---|---|---|---|---|---|---|---|---|---|

| | | | | |
|---|---|---|---|---|
| (1) | Model Code - 1 | Display part LCD size | 3 | : 3.7 Inch |
| | | | 5 | : 5.7 Inch (IP65 Certification) |
| | | | 7 | : 7.5 Inch |
| (2) | Option Suffix Code - 1 | Control method | 0 | : General control |
| | | | 1 | : Heating · Cooling control |
| (3) | Option Suffix Code - 2 | I/O board | 0 | : I/O 1 Board |
| | | | 1 | : I/O 2 Board (additional 20 relays) |
| (4) | Option Suffix Code - 3 | SD card | - | : NONE |
| | | | SD | : SD card |
| (5) | Option Suffix Code - 4 | Ethernet option | - | : NONE |
| | | | CE | : Ethernet(TCP/IP) |

# Dual/Single loop
## Programmable controller **TEMP2000** series

## General **Specifications**

| Group | Item | Single Loop | | | Dual Loop | | |
|---|---|---|---|---|---|---|---|
| | | **TEMP2300** | **TEMP2500** | **TEMP2700** | **TEMP2320** | **TEMP2520** | **TEMP2720** |
| Display | Type | 3.7" TFT-LCD | 5.7" TFT-LCD | 7.5" TFT-LCD | 3.7" TFT-LCD | 5.7" TFT-LCD | 7.5" TFT-LCD |
| | Screen Resolution | 640(W) x 480(H) | | | | | |
| | Language | KOR / ENG / JPN, KOR / ENG / CHN, KOR/ ENG / RUS | | | | | |
| | Font | 3 kinds of PV font(HEAD/NORM/ART) | | | | | |
| | Logo Screen | Available to customize initial Logo screen by user | | | | | |
| | User Screen | 16 customized user interface for screen saver | | | | | |
| | Mount Method | Panel mount, VESA mount(MIS-D 75) | | | | | |
| Analog Input | Number of point | 1 Point(Universal Input) | | | 2 Points(Universal Input) | | |
| | Type | TC | : K, J, E, T, R, B, S, L, N, U, W, Platinel Ⅱ, C | | | | |
| | | RTD | : Pt100(JIS/IEC), JPt100(JIS) | | | | |
| | | DC Voltage | : 0.4~2V, 1~5V, 0~10V, -10~20mV, 1~100mV(4~20mA, 0~20mA : Load resistor 250Ω, 500Ω) | | | | |
| | Sampling Time | 250ms | | | | | |
| | Accuracy | ±0.1% + 1digit of Full Scale | | | | | |
| | Bias | 8 points of piece and full bias | | | | | |
| | Display Unit | PT/RTD sensor : ℃, ℉ DCV sensor : ℃, ℉, BLANK, %, Pa, ㎪, %RH, ㎷, V, Ω, mmHg, kgf | | | | | |
| Analog Output | Type | Voltage(SSR) 1 point/channel | ON : 24V DC(Pulse width : min. 5ms) | | | | |
| | | Current(SCR) 1 point/channel | 4~20mA DC(Load resister : Max. 600Ω) | | | | |
| | Object | Control output | MV(0 ~ 100%) of Each channel | | | | |
| | | Retransmission output | Selectable among PV, SP, MV of Each channel | | | | |
| Digital Input | Contact type | 16 points base (Relay contact capacity : max. 12V DC, 10mA), Select A or B point contact | | | | | |
| | Functions | RUN/STOP/HOLD/STEP, Selectable RUN patterns,<br>Set DI Detect Delay time, Select DI error monitor(text or picture) | | | | | |
| Digital Output | Contact type | 12 points base(Additional 20 points by option) | | | | | |
| | | 4 points base C-contact Relay | Normal Open (Max. 30VDC/1A, 250VDC/1A) | | | | |
| | | | Normal Close (Max. 30VDC/1A, 250VDC/1A) | | | | |
| | | 8 points base A-contact Relay | Normal Open (Max. 30VDC/1A, 250VDC/1A) | | | | |
| | | Additional 20 points A-contact Relay(Option) | | | | | |
| | Signal type | Inner Signal(8points/Channel) | ON/OFF Signal(7points/Channel) | Logical Signal(3points) | Error Signal(1point/Channel) | User Signal(1points) | |
| | | Time Signal(8points/Channel) | Fix · Programmable END Signal(2points/Channel) | DI Signal(16points) | WAIT Signal(1points/Channel) | REF Signal(2points/Channel) | |
| | | Alarm Signal(4points/Channel) | SEG alarm Signal(4points/Channel) | manual Signal(12points) | Sensor open Signal(1points/Channel) | | |
| | | RUN Signal(1points/Channel) | UP · SOAK · DOWN Signal(3points/Channel) | Fix Timer Signal(1points/Channel) | | | |
| Program | Number of program | 80 Patterns / 1200 Segments | | | 80 Patterns / 1200 Segments(40/ch1, 40/ch2) | | |
| | Segment Time | Max. 999hours 59minutes 59seconds in one segment | | | | | |
| | Auxiliary functions | UP/DOWN Slope rate, WAIT, Operating Start Code, Pattern Name, Power Stop mode, PTEnd mode | | | | | |
| | | Pattern / Segment repeat operation | | | | | |
| PID Control | PID groups | 6 PID groups(5 Zone PID + 1 Deviation PID or 6 Seg PID of Each channel) | | | | | |
| | PID type | Zone PID, Deviation PID, Seg PID | | | | | |
| | Auxiliary functions | Changeable Tuning point, PID tuning Gain, Selectable Disease control code | | | | | |
| Data Back-Up | Object | SD card, MMC card(FAT32) | | | | | |
| | Logging function | Back-up and restore data of Program Pattern / Parameter Settings, and SP / PV / MV value | | | | | |
| Communication | Interface | Flexible to change between RS485 / RS232C by DIP switch, Max. 31 nodes. Max 115,200 bps , Ethernet support | | | | | |
| | Protocol | PCLink, PC Link(Checksum), MODBUS RTU, MODBUS ASCII, Sync-Master(CH1,CH2 Select) | | | | | |
| Power Supply | Power | 24VDC 22VA Max. | | | | | |
| | Lithium battery | For setup data retention(CR2032) | | | | | |

## Model **Code**

| T | E | M | P | 2 | (1) | (2) | 0 | - | (3) | (4) | / | (5) | / | (6) |
|---|---|---|---|---|---|---|---|---|---|---|---|---|---|---|

| | | | | | |
|---|---|---|---|---|---|
| **(1)** | Model Code - 1 | Display part LCD size | 3 | : | 3.7 Inch |
| | | | 5 | : | 5.7 Inch (IP65 Certification) |
| | | | 7 | : | 7.5 Inch |
| **(2)** | Model Code - 2 | Control channel | 0 | : | Single loop (1 Channel Control) |
| | | | 2 | : | Dual loop (2 Channel Control) |
| **(3)** | Option Suffix Code - 1 | Control method | 0 | : | General control |
| | | | 1 | : | Heating · Cooling control |
| **(4)** | Option Suffix Code - 2 | I/O board | 0 | : | I/O 1 Board |
| | | | 1 | : | I/O 2 Board (additional 20 relays) |
| **(5)** | Option Suffix Code - 3 | SD card | - | : | NONE |
| | | | SD | : | SD card |
| **(6)** | Option Suffix Code - 4 | Ethernet option | - | : | NONE |
| | | | CE | : | Ethernet(TCP/IP) |

# External dimension and Panel cutting size

## Display Part

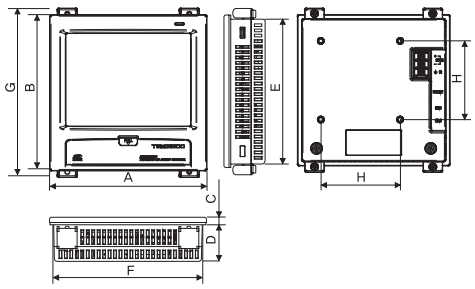


(Unit : mm)

| MODEL | A | B | C | D | E | F | G | H |
|---|---|---|---|---|---|---|---|---|
| 2300 Series | 112 | 105 | 6.2 | 33.5 | 98 | 105 | 117 | 75 |
| 2500 Series | 144 | 144 | 6.2 | 33.5 | 137.5 | 137.5 | 156 | 75 |
| 2700 Series | 203 | 180 | 6.8 | 38.2 | 173 | 196 | 192 | 75 |

※ Panel Cutting size : E, F (Tolerance : 0 / +1.0)

## Control Part

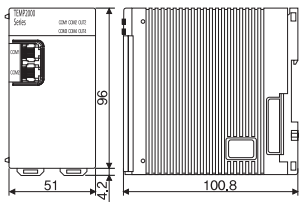


## I/O Board

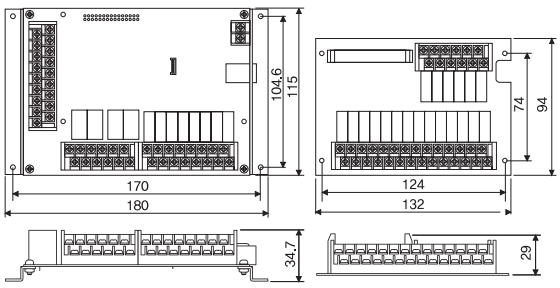


# Terminal Assignment

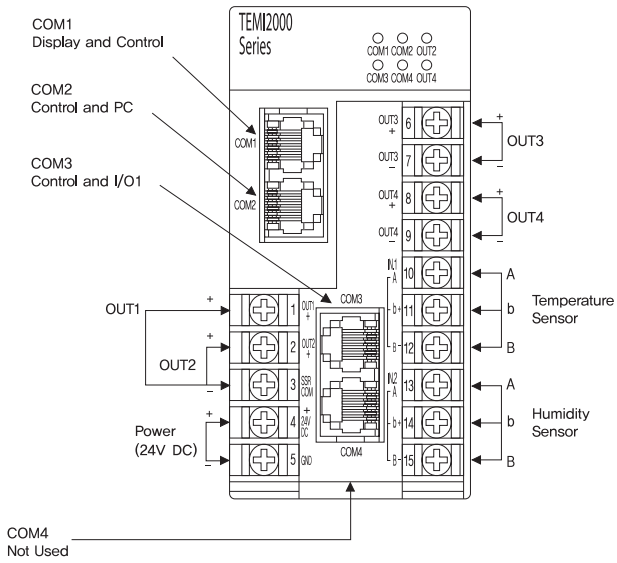


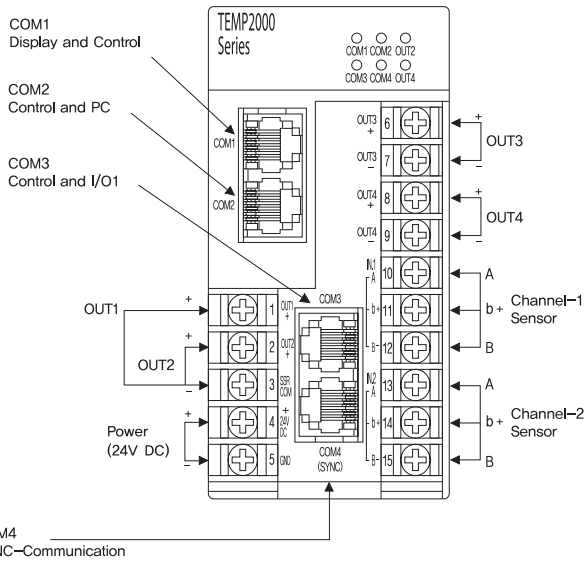


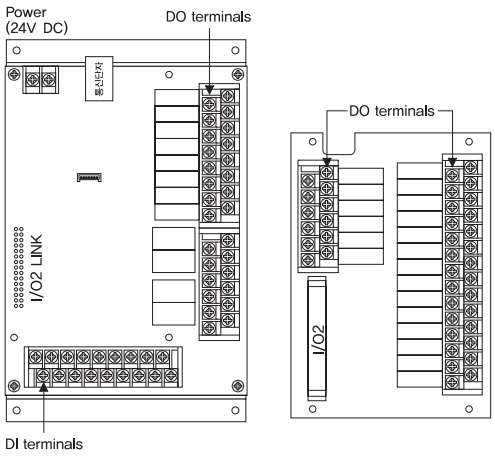


## 2300

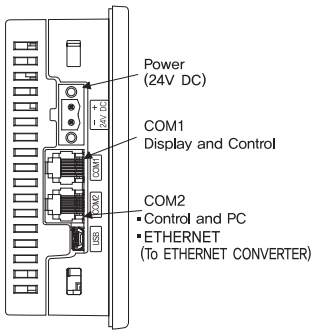


## 2500/2700

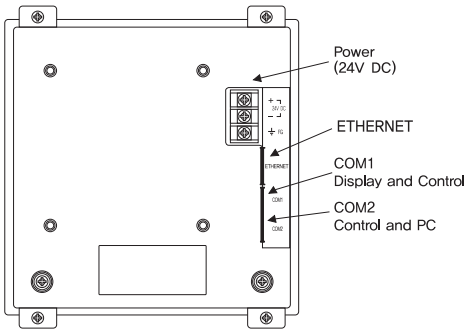



SAMWON TECH SAMWONTECH CO., LTD.
Bucheon Techno Park 2-danji, Yakdae-dong, Wonmi-gu, Bucheon-si, Gyeonggi-do, SEOUL 420-733 Rep. of KOREA
T +82-32-326-9120 F +82-32-326-9119 E webmaster@samwontech.com / Sales@samwontech.com